Lotta Space station

SPACE STATION ELEMENTS
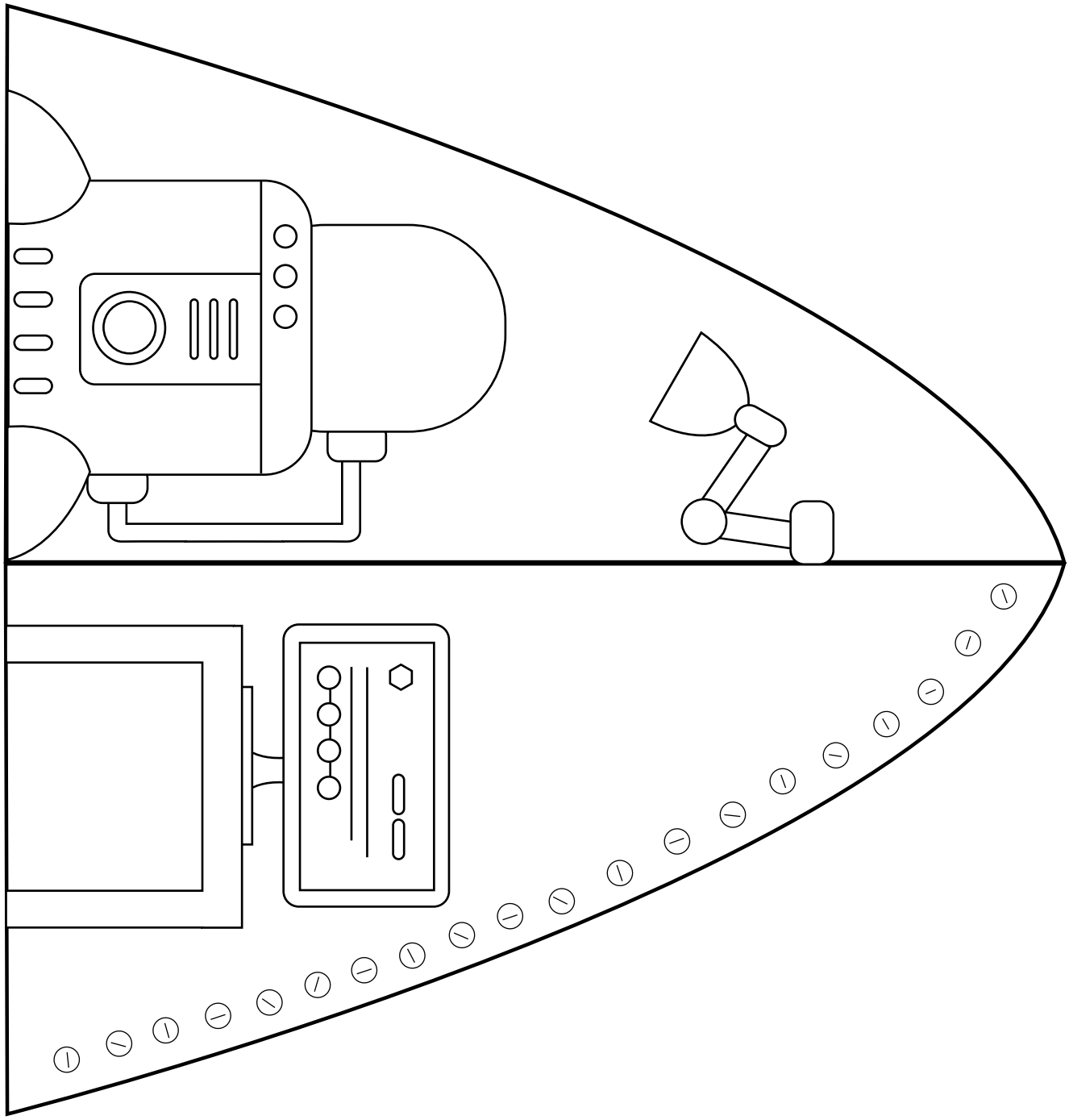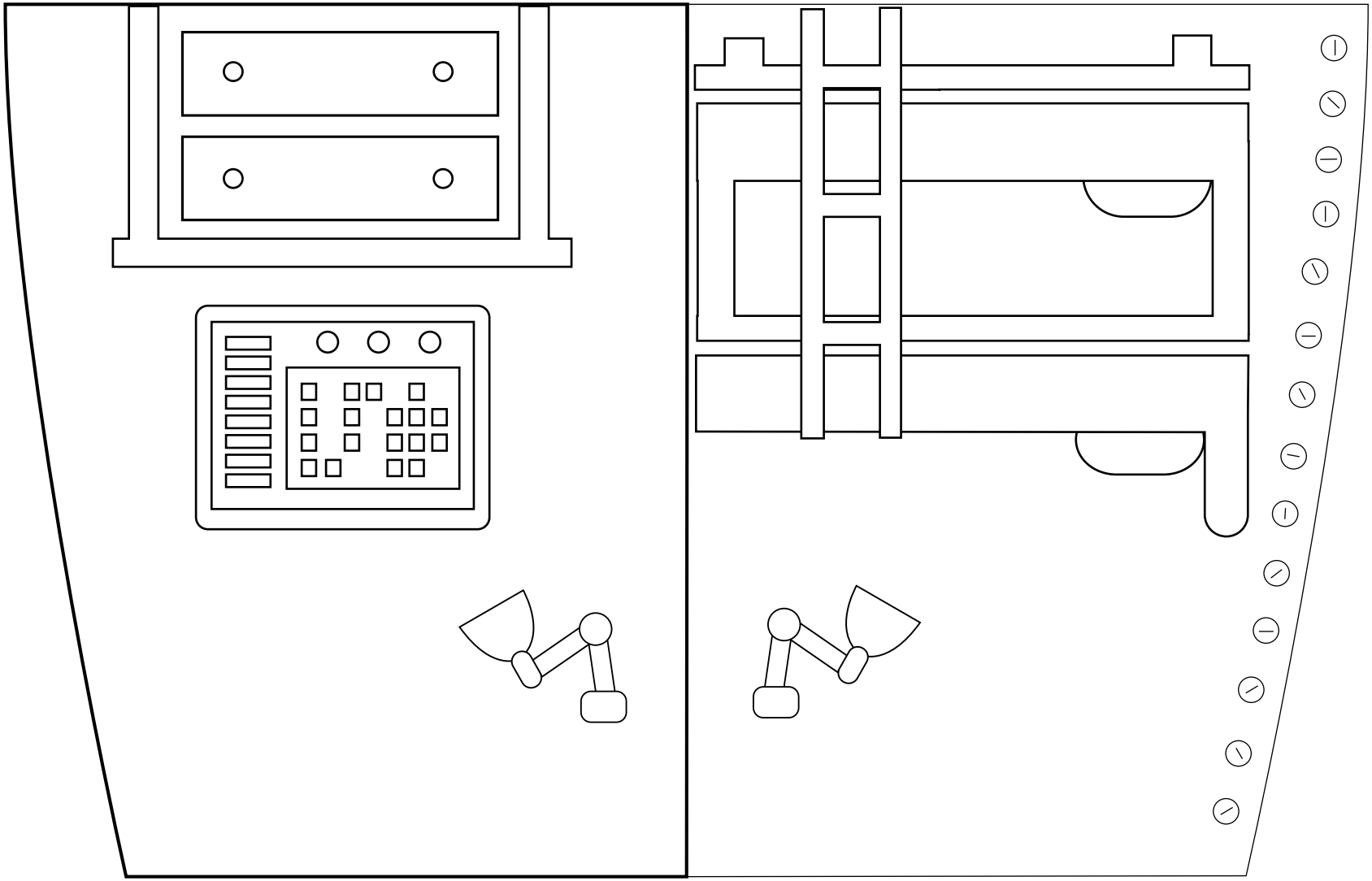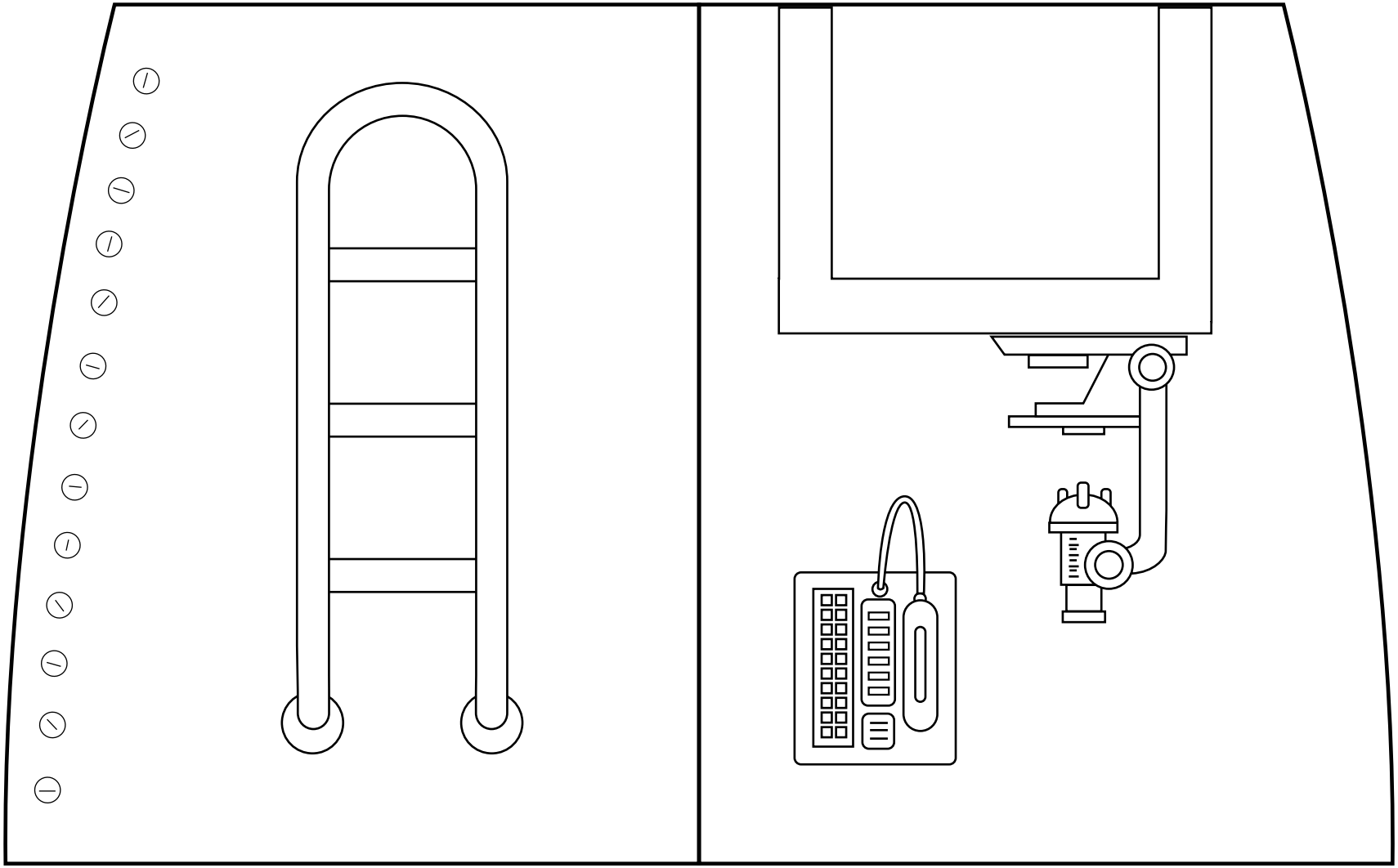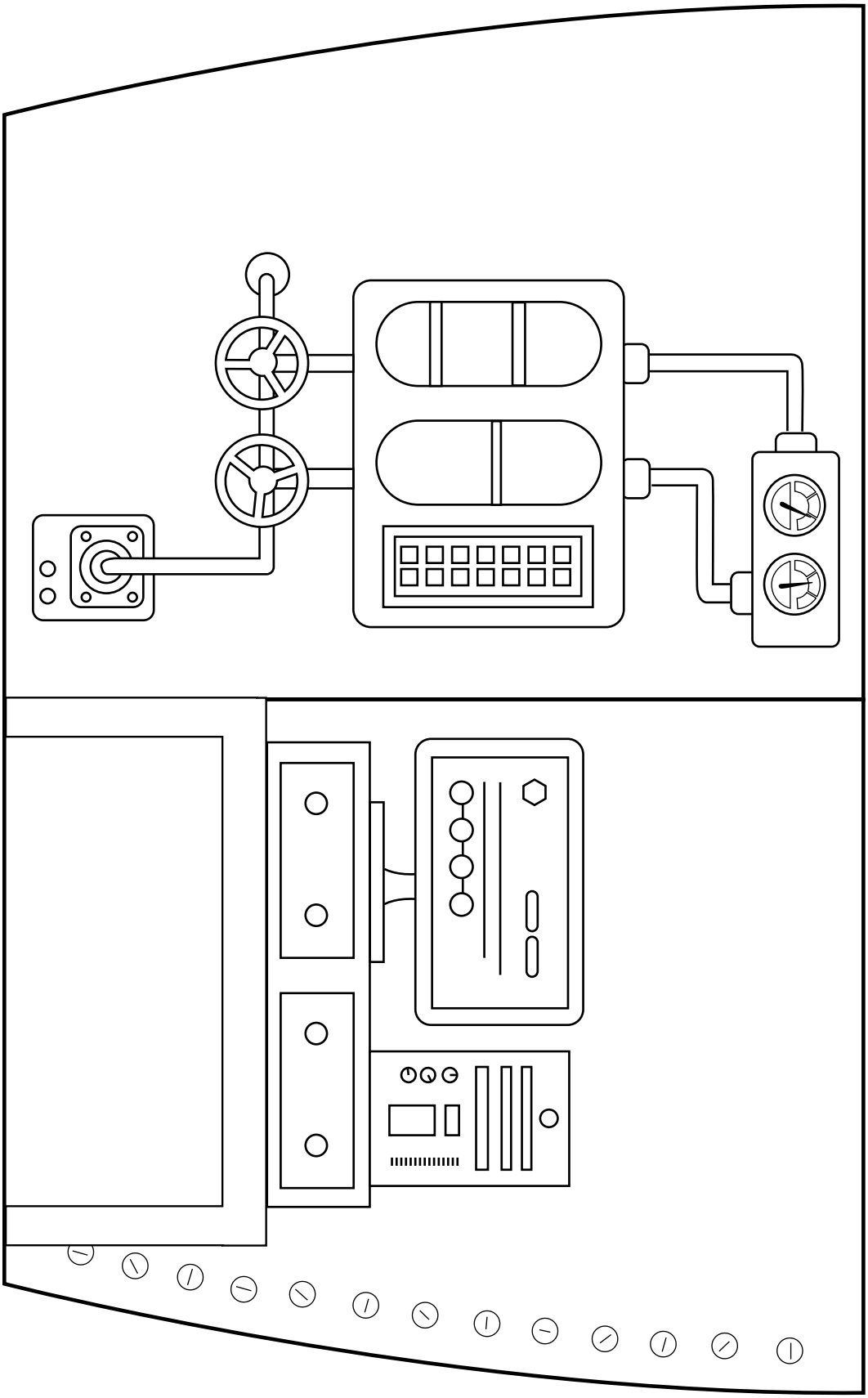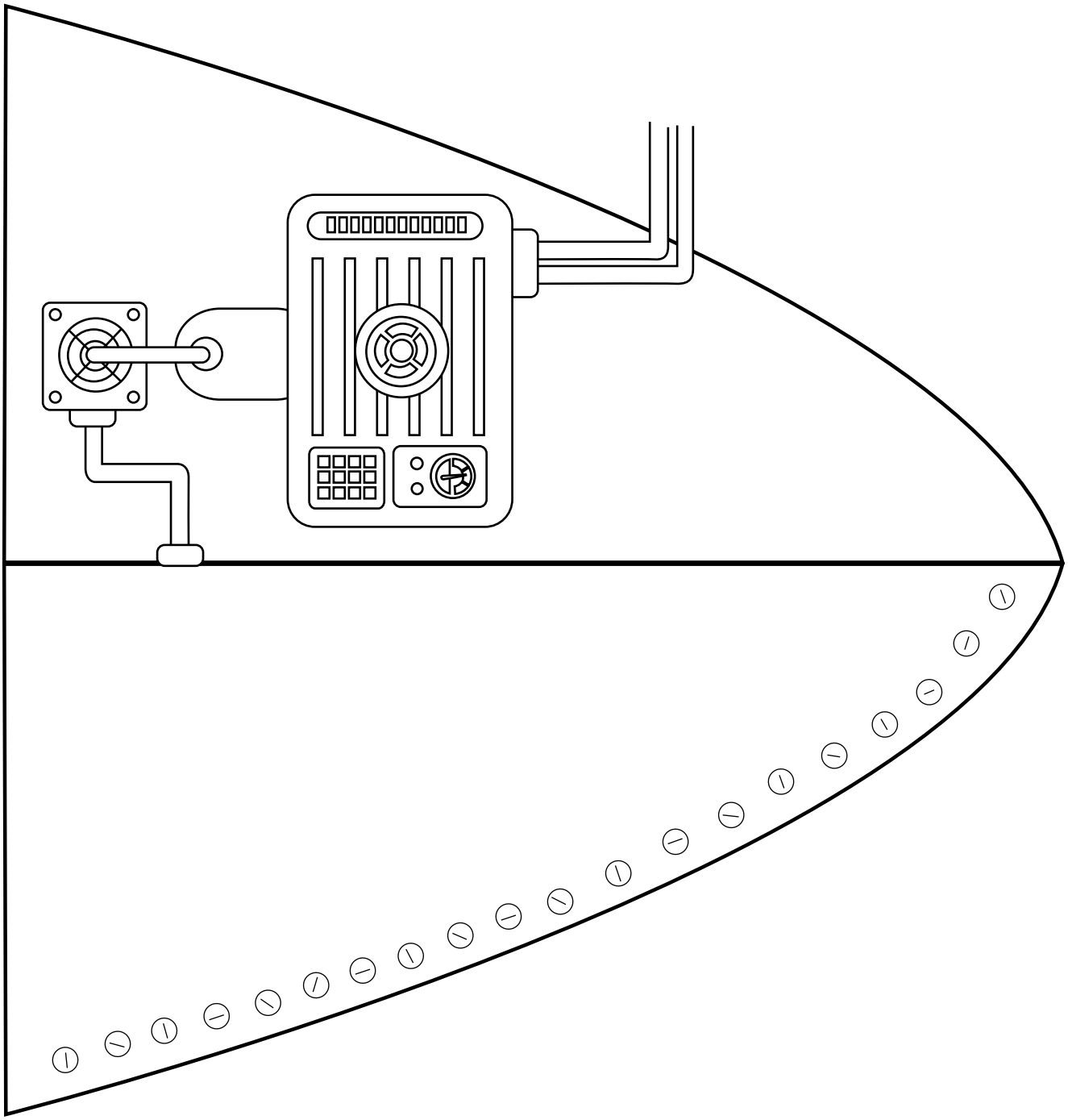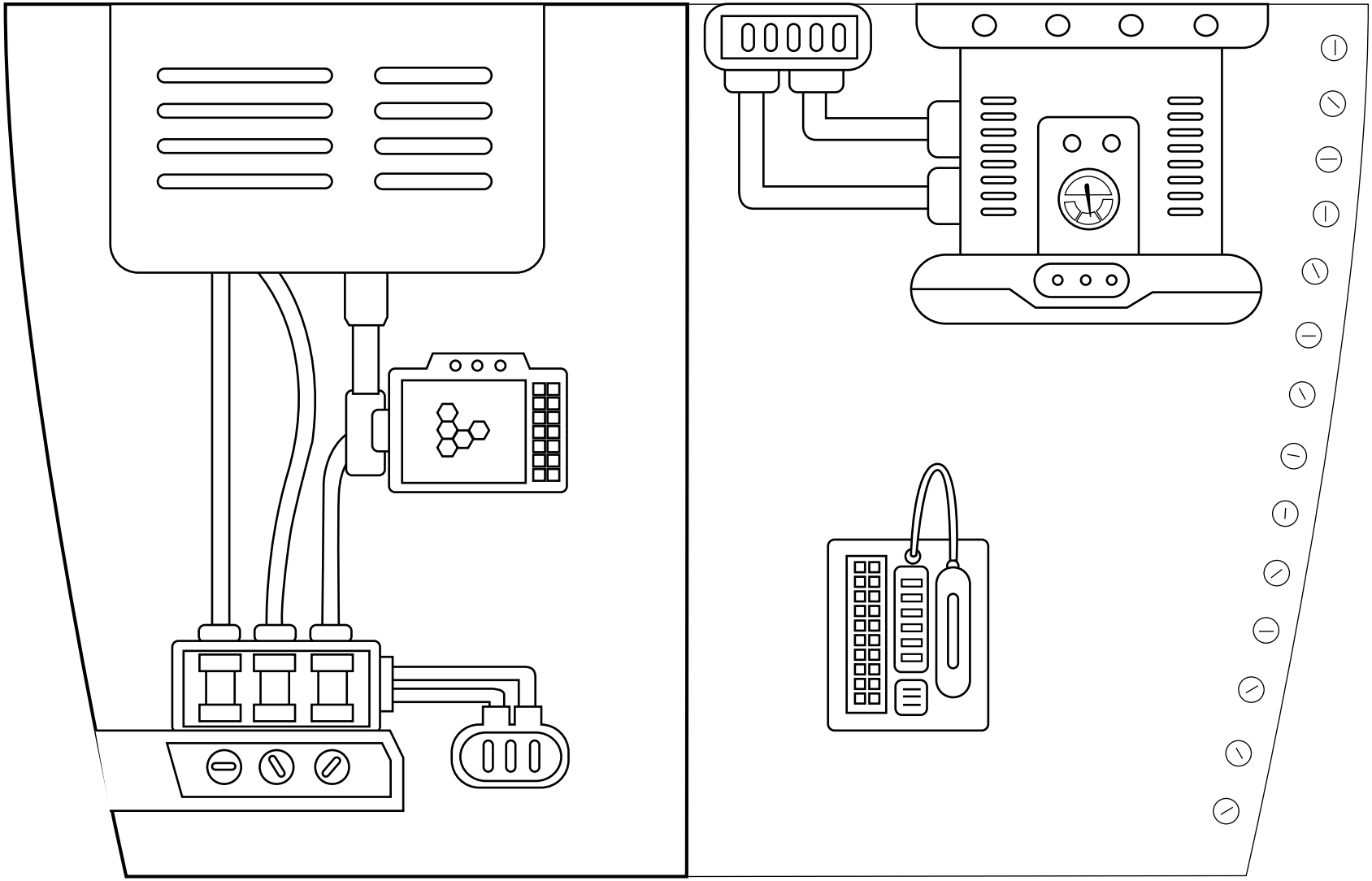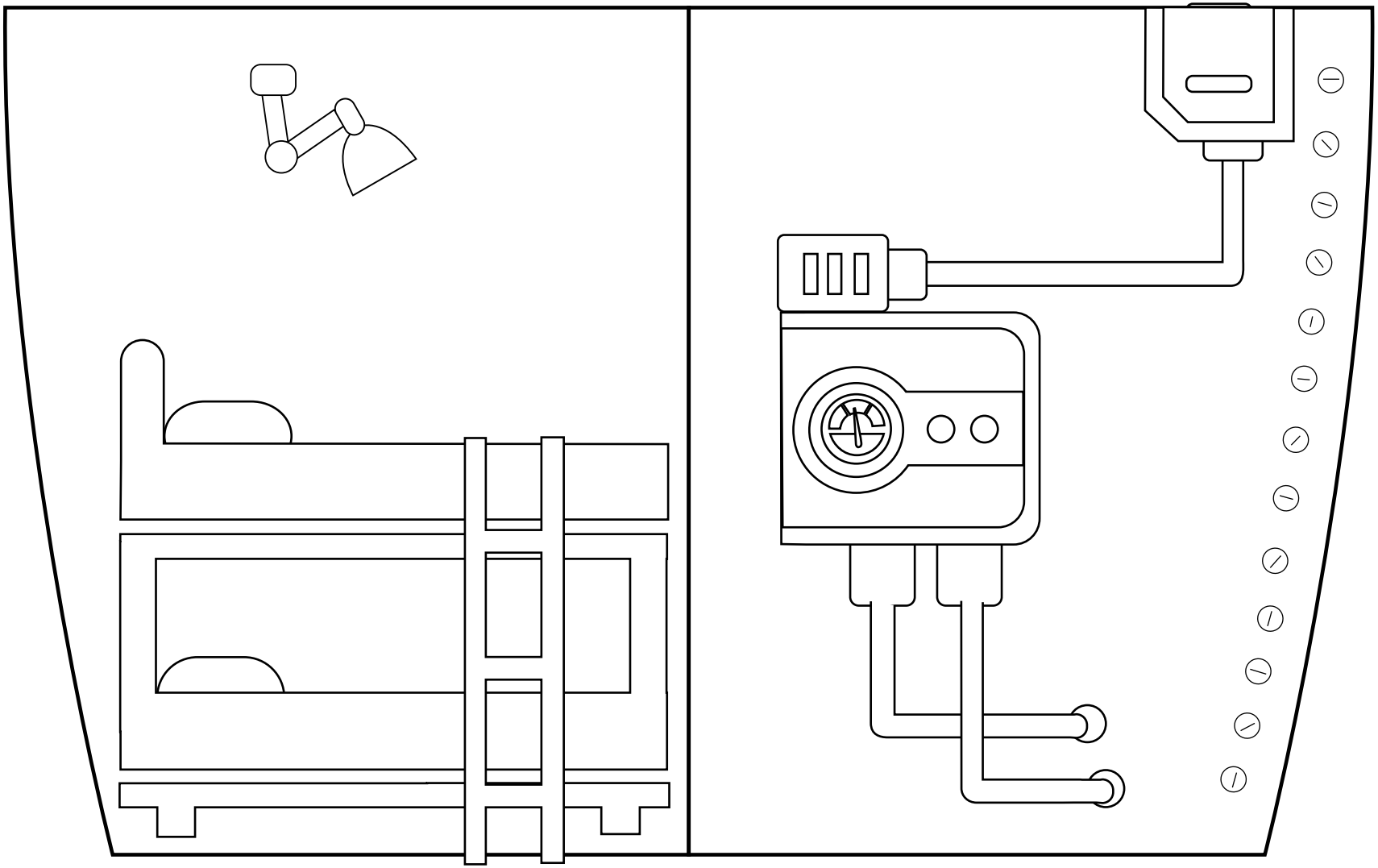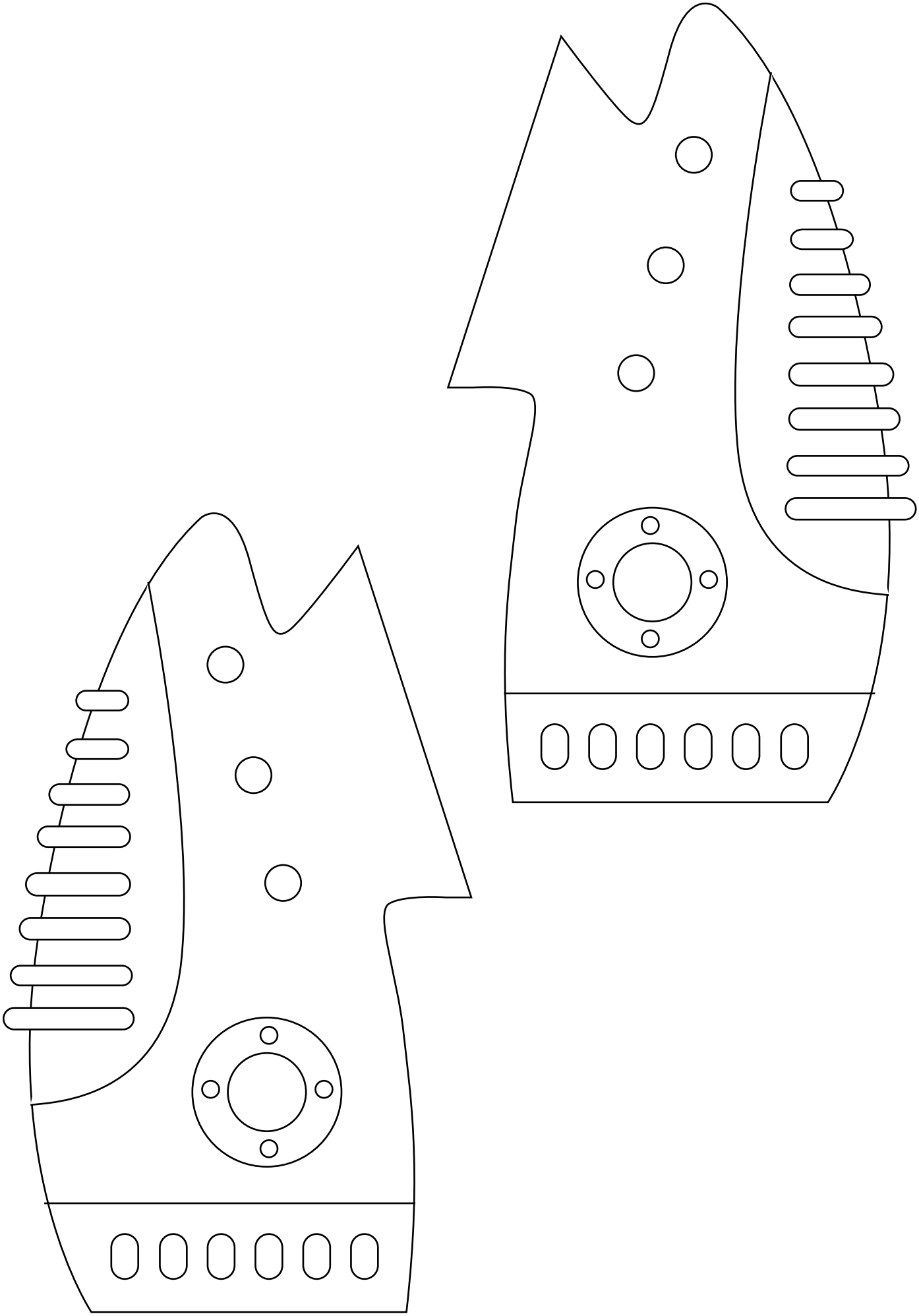
© Lotta Magazine